FOR-1754 Rev.1.1

未注公差/General tolerances(mm)														
0 ~ 3	>3 ~ 6	>6 ~ 10	>10 ~ 18	>18 ~ 30	>30 ~ 50	>50 ~ 80	>80 ~ 120	>120 ~ 180	>180 ~ 250	>250 ~ 315	>315 ~ 400	>400 ~ 500	>500	0.1/10
±0.12	±0.18	±0.22	±0.26	±0.31	±0.37	±0.57	±0.80	±0.93	±1.05	±1.15	±1.60	±2.20	±2.50	±2°

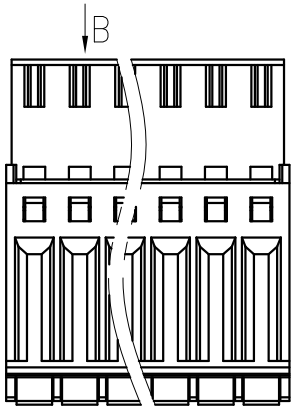

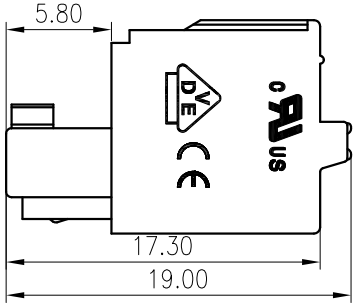

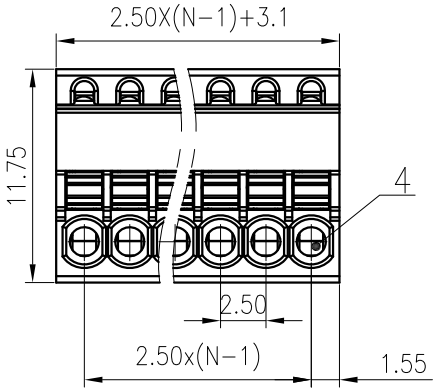

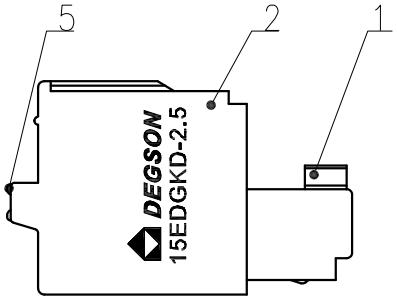

ITEM	NAME OF PART	MATERIAL	NOTES
5	Button	POM	UL94HB
4	Spring	Stainless steel	
3	Clamp	Copper alloy	Sn Plated
2	Housing	PA66	UL94V-0
1	Cover	PA66	UL94V-0

UL 标准/UL Standard:	B	C	D
额定电压/电流/Rated Voltage(V)/Current(A)	150/4	150/4	150/4
IEC 标准/IEC Standard:			
过压类别/Overvoltage Category/污染等级/Pollution Degree	III/3	III/2	II/2
额定电压/电流/Rated Voltage(V)/Current(A)	/	/	250/5
额定脉冲电压(KV)/Rate Impulse Voltage(KV)	/	/	2.5
线径范围(硬线和软线)/Wire Range(rigid and flexible)(mm^2/AWG)	0.2~0.5/26~20		
间距/Pitch(mm)/线数范围/Poles	2.5/N=02~12P		
剥线长度/Stripping length(mm)	8.0		
使用温度范围/Operating temperature(°C)	-40~+105		
符合RoHS环保要求/Conform to RoHS	Yes		

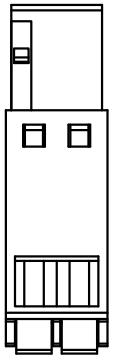

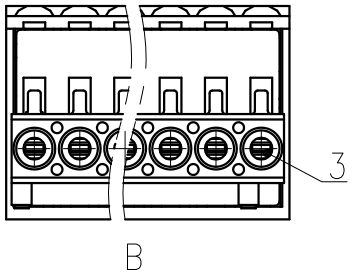

MATERIAL:		SURFACE:	
MAT NO.:	/	DEGSON® 宁波高松电子有限公司 NINGBO DEGSON ELECTRICAL CO., LTD	
STATUS:	/		
APPD:	LiGL 2020.06.17	NAME: 15EDGKD-2.5-XXP-1Y-00A(H)	
CHKD:	MaEK 2020.06.17		
DRFT:	WJW 2017.06.29	DRAWING NO.: 15EDGKD-2.5-C01	REV T1
SIZE: A4	mm (inch)	TYPE: CUSTOMER DRAWING	SCALE: 2.5:1 SHEET 1/1

REV	ECN	DESCRIPTION	DRFT	DATE