FOR-1351 Rev.1.0

TYPE	Thread(D1)	Selection
D16B-SE-4g-M25	M25	
D16B-SE-4g-M32	M32	
D16B-SE-4g-PG21	PG21	

REVISION RECORD				
REV	ECN	DESCRIPTION	DRFT	DATE

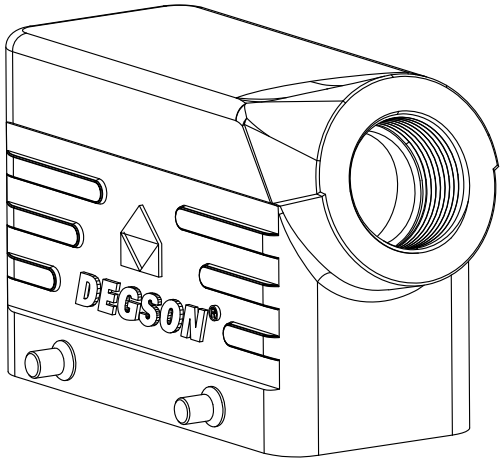

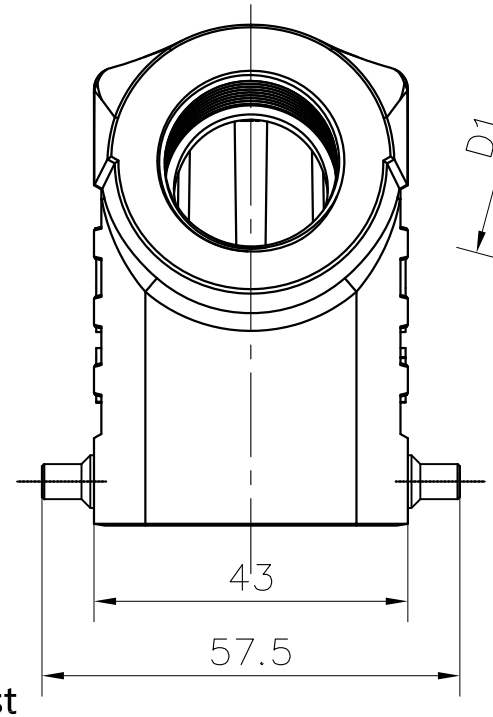

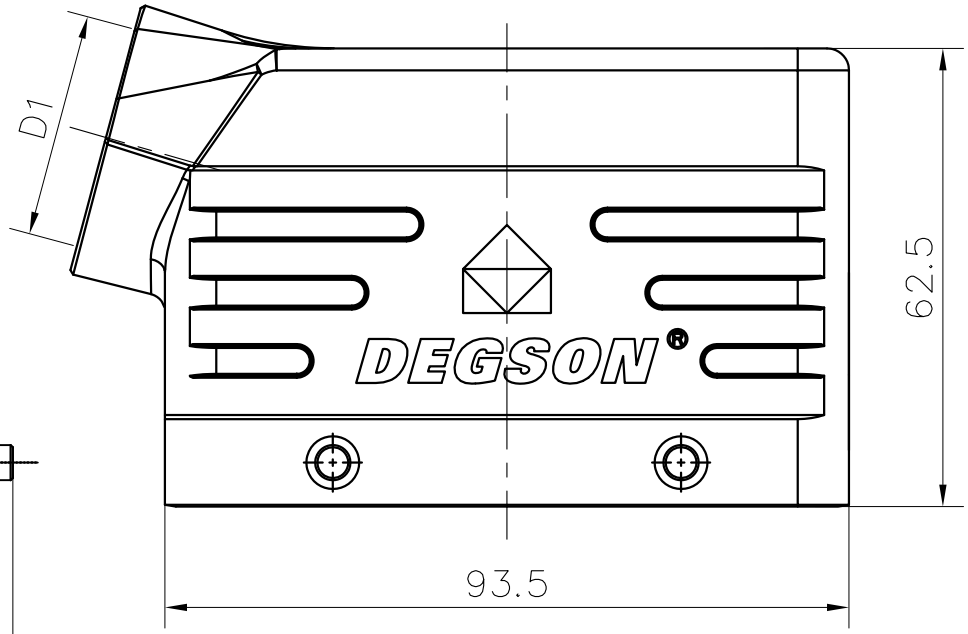

Hoods Feature

1.Material: aluminium die-cast
2.Surface:Powder-coated
3.Color:grey(RAL 7037)
4.Limiting temperatures:-40℃ ~ +125℃
5.Flammability acc to UL94:V0
6.Degree of protection acc.to
EN60529 for coupled connector :IP65
7.Rohs compliance

DETACHED LISTS	PART NO.: /	DEGSON® 宁波高松电子有限公司 NINGBO DEGSON ELECTRICAL CO., LTD	
	APPD:	NAME: D16B-SE-4g-M/PG	
	CHKD:		
	DRFT: Mr.yang 2017/06/28	TITLE: CUSTOMER DRAWING	REV D0-1
	THIRD ANGLE PROJECTION	DRAWING NO.:	SHEET 1/1
		MM (INCH) DO NOT SCALE DRAWING	SCALE 1:1